NO.	DATE	REVISIONS	DWG	CHK	APP

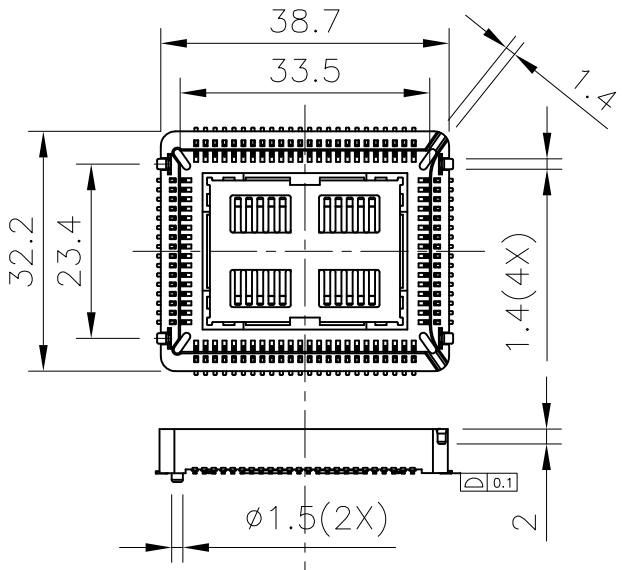

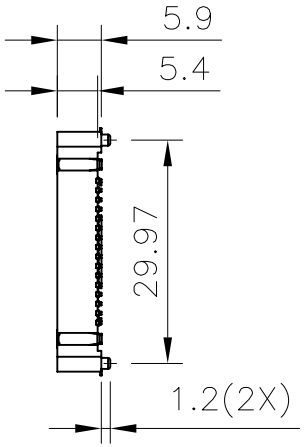

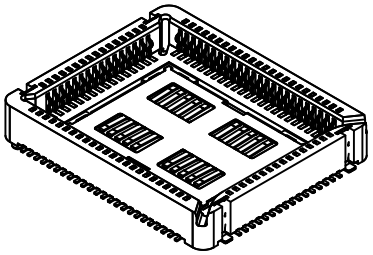

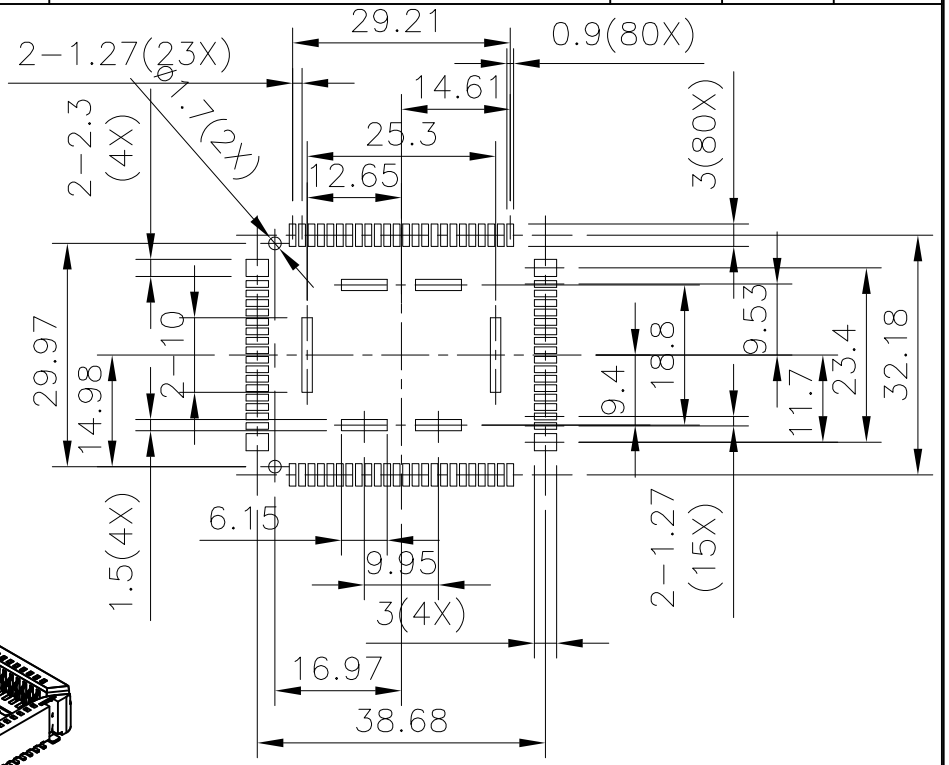

PCB LAYOUT (TOP VIEW)

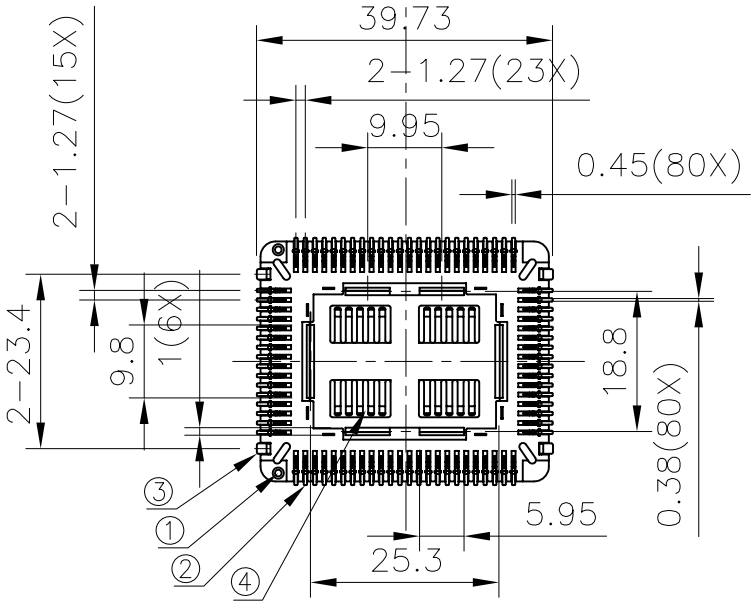

No.	PART NAME	MATERIAL	SPECIFICATION	Q'TY	REMARKS
4	SHRAPNEL	Phosphor Bronze	Underplate:Min.Ni50u". Solder Tails:Min 100u" tin	1	
3	PEG	BRASS	Underplate:Min.Ni50u". Solder Tails:Min 100u" tin	4	
2	CONTACT	Phosphor Bronze	Underplate:Min.Ni50u".Mating area: Au 10u" Solder Tails:Min 100u" tin	80	
1	HOUSING	LCP	UL94V-0	1	

LENGTH	GRADE ①	2	3	4	5
16 ↓	0.05	0.1	0.1	0.2	0.3
16~63	0.05	0.1	0.2	0.3	0.4
63~250	0.1	0.2	0.3	0.4	0.5
250~1000	0.2	0.3	0.4	0.5	0.6

UNIT (mm)

3DR ANGLE		UNIT	MM / ~~INCH~~	SCALE.	1/1	Q'TY	1
DRAW	DESIGNED	CHECKED	APPROVED	MATERIAL.			
C.NOH	C.NOH			DRAWING NO.	PLA-PIC08-00		
APR 02 ,2015	APR 02 ,2015			PART NAME.	P900 NICOLE SOCKET		
				MODEL NAME.	NICOLE		

Microhard Systems Inc.